Bridge amplifier circuitry with differential input and defined output impedance

D.Danyuk and G.Pilko

Indexing terms: Circuit theory and design, Bridge amplifiers, Differential amplifiers

The letter presents a simple method of designing and constructing an amplifier whose output impedance is of certain value. Two practical inexpensive configurations are discussed. One of them is a differential amplifier with grounded load. Another is a symmetrical bridge circuit with differential output, operated either with floating or grounded load, balanced or unbalanced.

Introduction

For certain electronics system an amplifier whose output impedance has positive real part and is of some definite value is required. Accurate impedance matching is frequently needed in audio [1] or characteristic-impedance systems [2].

A common approach is the series/shunt impedance for adaptation. This leads to deterioration of power efficiency and available output swing [1,2]. If the load and output resistances were equal, half the voltage and three quarters the output power would be lost.

A different approach is listed in [1,2] where the desired output impedance is set with the aid of feedback of proper type. An inverting amplifier with shunt voltage feedback and active current feedback loops was proposed in [1]. Additional current feedback network contains current sense impedance in series with load and a differential amplifier to obtain output current signal. Essentially the same circuit but noninverting one can be found in [3].

It appears to be convenient to reconfigure the circuit from being a combination without direct current sensing. This approach allows employing passive elements exclusively in the feedback network of the single amplifying path. Apart from simplicity, the circuit is free from noise and distortion generated in differential amplifier in active current feedback loop.

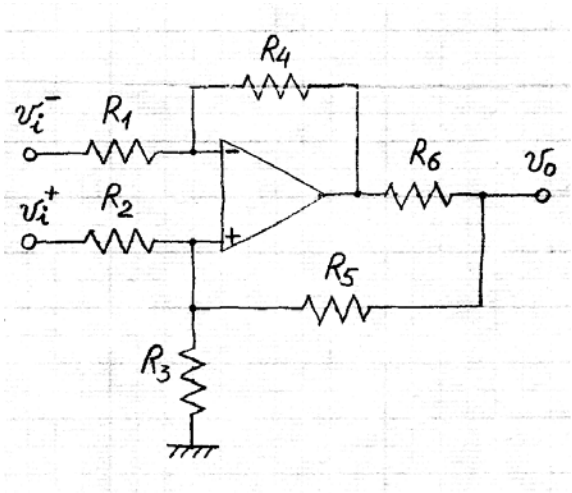

Fig.1

Differential single-ended amplifier

The differential amplifier circuit shown in Fig.1 is a dual-loop configuration with accurate impedance at output port [4]. Assuming that the amplifier is ideal and the signal-source impedances are infinitely low the open-circuit voltage can be written as

$$G_1 = \frac{v_o}{v_i^+ - v_i^-} = \frac{R_4 R_5}{R_1 R_5 - R_2 R_4}$$

The output impedance of the amplifier is

$$z_o = \frac{G_1 R_1 R_6}{R_4}$$

The common mode rejection ratio is the highest when

$$R_3 = G_1 R_2$$

Without R_5 the circuit turns into standard differential amplifier. Provided G_1 is infinite the circuit comes to conventional bipolar current source [5].

It is handy to choose $R_4 = R_5$ where the value of R_5 is much larger that the required output impedance z_o. The necessary design constrains are $R_1 = \frac{R_4 z_o}{R_6 G_1}$, $R_2 = R_1 - \frac{R_5}{G_1}$, $R_3 = R_2 G_1$.

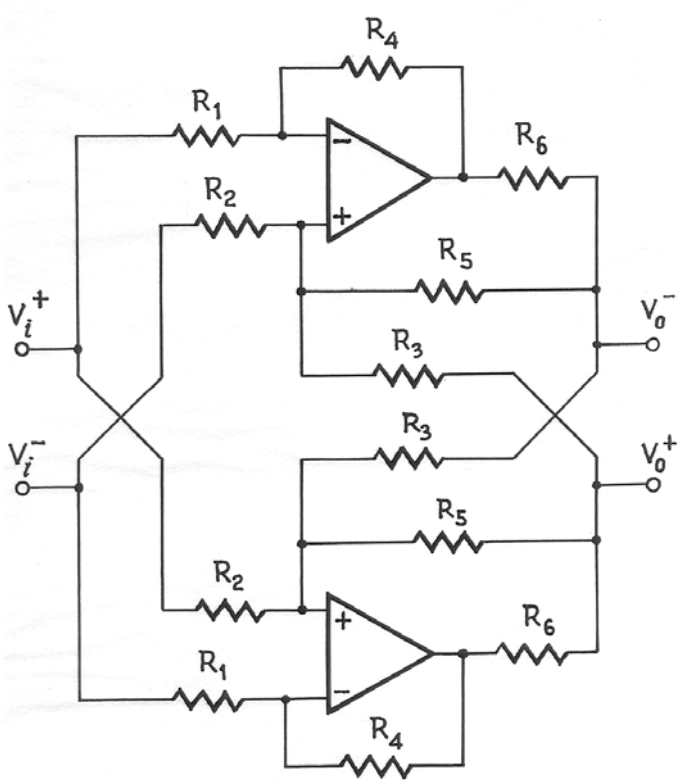

Fig.2

Bridge amplifier

The bridge amplifier circuit is shown in Fig.2 is a triple-loop configuration with floating output ports. It is a balanced version of the circuit and will maintain constant gain and output impedance with any type of load, be it either floating or grounded, balanced or unbalanced. The open-circuit voltage gain is given by

$$G_2 = \frac{v_o^+ - v_o^-}{v_i^+ - v_i^-} = \frac{R_4 R_5}{R_1 R_5 - R_2 R_4}$$

The output impedance is

$$z_o = \frac{G_2 R_1 R_6}{R_4}$$

The common mode rejection ratio is the highest when

$$R_3 = G_2 R_2$$

The additional cross-coupled feedback connection gives a possibility to operate either with floating or grounded load, no matter which point of load is shortened to ground. If one of the

output terminals is grounded, full voltage swing is transferred to the opposite output terminal. At the same time the input voltage is removed from the shortened amplifier, preventing the latter from large short-circuit output current.

Conclusions

A very simple bridge amplifier with differential input and precisely fixed output impedance is presented. The circuit has transformer output characteristics and maintains constant gain and output impedance with any type of load, be it floating or grounded one, balanced or unbalanced.

References

1. J.H.Levitt, “Impedance Tailoring via Feedback,” *J. Audio Eng. Soc*., 1975, vol.23, pp.466-469
2. E.H.Nordholt, “Design of High-Performance Negative Feedback Amplifiers,” Elsevier Scientific Publishing Co., Amsterdam, 1983
3. A.J.Chamberlain, “Composite-Feedback Amplifier,” *Electronics World and Wireless World*, 1989, vol.95, p.1022
4. J.D.Slife, “Op Amp Increases Output Impedance,” *EDN*, 1990, Jan.18, p.184
5. U.Tietze und Ch.Schenk,“Hableiter-schaltungstechnik,” Springer -Verlag, Berlin, 1980