dcr MASSACHUSETTS DEPARTMENT OF CONSERVATION AND RECREATION

DCR's Blackstone River Greenway Segment 1

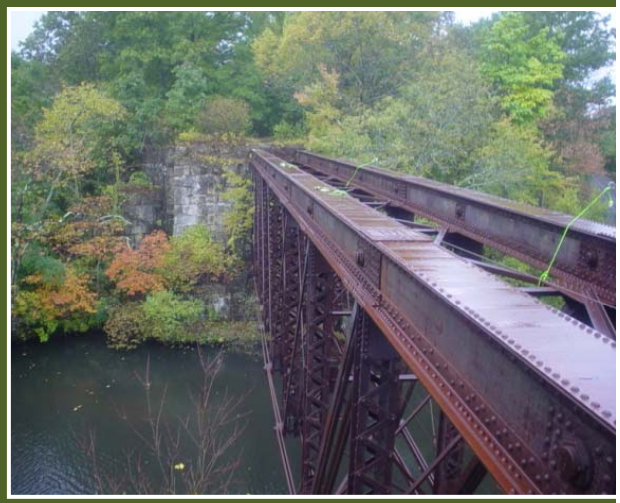

DCR Informational Meeting

November 8, 2011
Blackstone Town Hall

dcr MASSACHUSETTS DEPARTMENT OF CONSERVATION AND RECREATION

Commonwealth of Massachusetts

Governor
Deval L. Patrick

Lieutenant Governor
Timothy Murray

Energy and Environmental Secretary
Richard K. Sullivan, Jr.

Department of Conservation and Recreation Commissioner
Edward M. Lambert, Jr.

dcr
Massachusetts

DCR Mission Statement

To protect, promote and enhance our commonwealth of natural, cultural and recreational resources.

dcr MASSACHUSETTS DEPARTMENT OF CONSERVATION AND RECREATION

Blackstone River Greenway

- Vision dates from early 1980's
- Bikeway/greenway from Providence, RI to Worcester, MA
- Major feature of John H. Chafee Blackstone River Valley National Heritage Corridor Commission
- Along the Blackstone River and Canal
- Connecting historic, recreation and natural sites

dcr MASSACHUSETTS DEPARTMENT OF CONSERVATION AND RECREATION

Blackstone River Greenway, Massachusetts

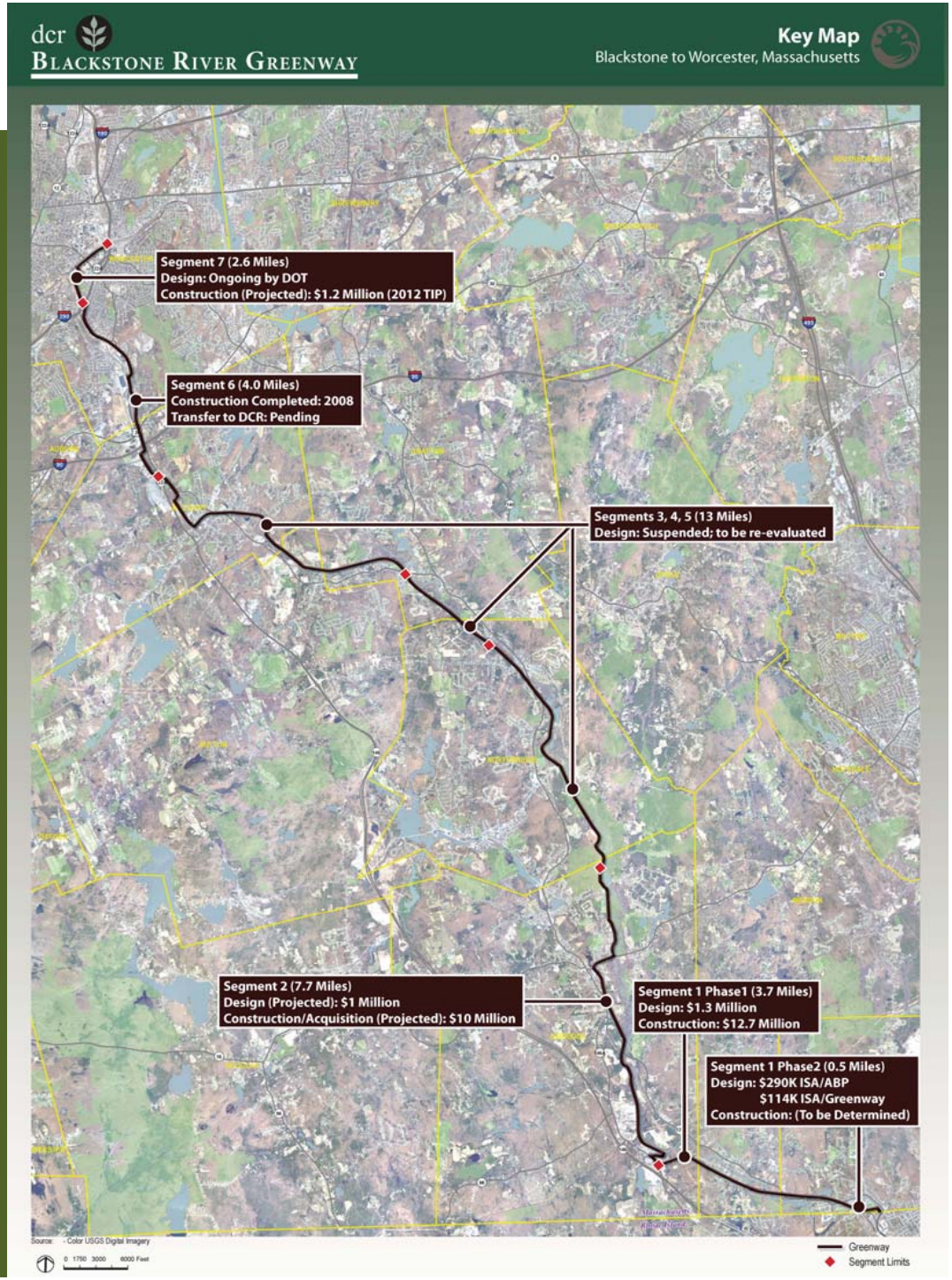

Segment 1

- Project Limits:
  - From the Rhode Island State line, through Blackstone and Millville, and Uxbridge to Rte 146A for a total length of 4.2 miles
    - Phase 1: 3.7 miles (St Paul Street to Rte 146A)
      - Note: Segment 1, Phase 1 now includes Central Street to Rte 146a (formerly part of Segment 2)
    - Phase 2: 0.5 miles (State Line to St. Paul Street)
      - Alternative alignments currently under evaluation

Blackstone River Greenway

Segments 1

Uxbridge, Millville and Blackstone, Massachusetts

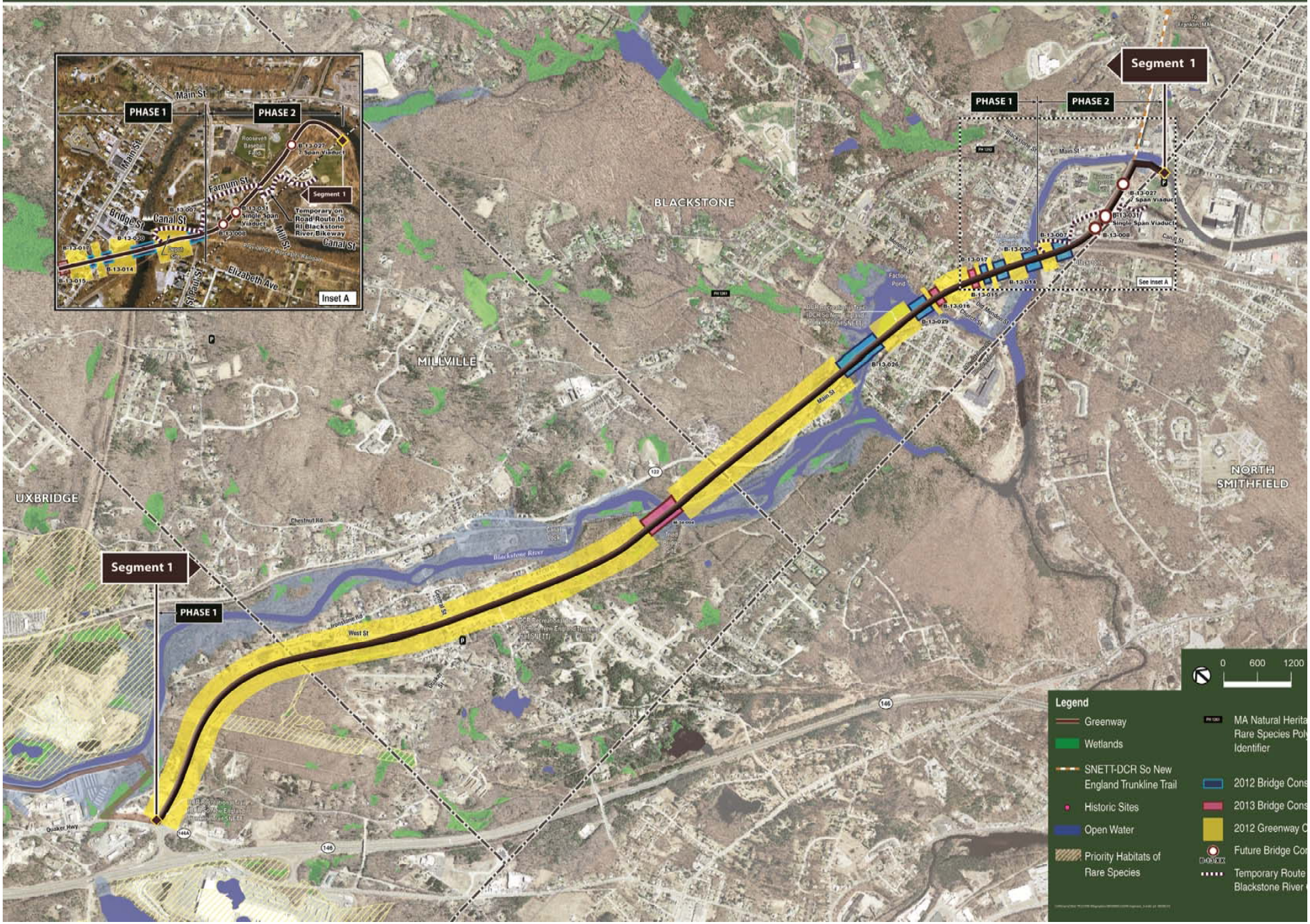

dcr MASSACHUSETTS DEPARTMENT OF CONSERVATION AND RECREATION

Segment 1, Phase 2

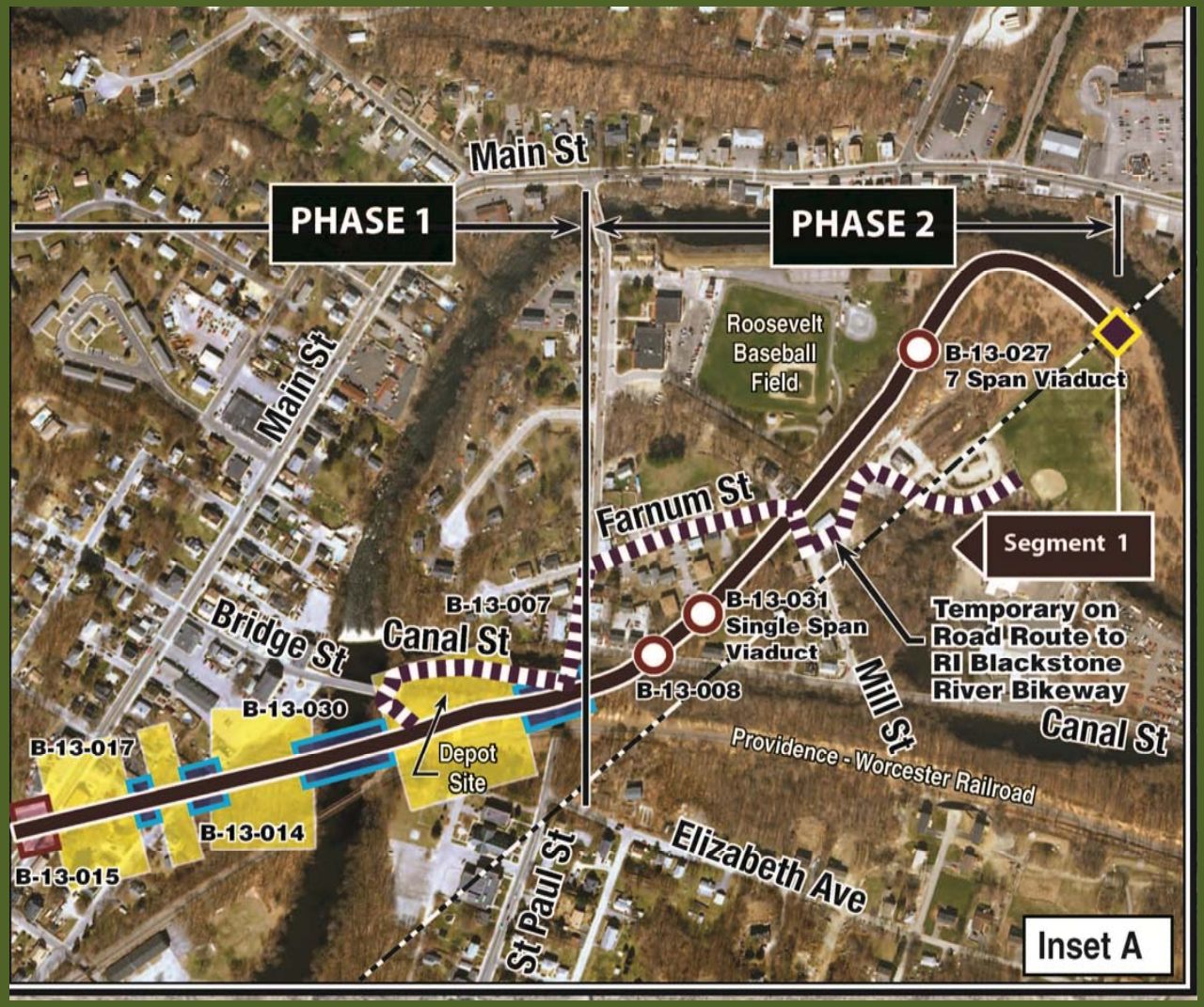

Phase 2 Bridges

dcr MASSACHUSETTS DEPARTMENT OF CONSERVATION AND RECREATION

Bridge B-13-027 Blackstone Viaduct

dcr MASSACHUSETTS DEPARTMENT OF CONSERVATION AND RECREATION

Bridge B-13-027 Blackstone Viaduct

dcr MASSACHUSETTS DEPARTMENT OF CONSERVATION AND RECREATION

Bridge B-13-027 Blackstone Viaduct

dcr MASSACHUSETTS DEPARTMENT OF CONSERVATION AND RECREATION

Bridge B-13-031 Blackstone Viaduct

dcr MASSACHUSETTS DEPARTMENT OF CONSERVATION AND RECREATION

Bridge B-13-008 Canal Street

Phase 1 Bridges

dcr MASSACHUSETTS DEPARTMENT OF CONSERVATION AND RECREATION

Bridge B-13-007 St. Paul Street

dcr MASSACHUSETTS DEPARTMENT OF CONSERVATION AND RECREATION

Bridge B-13-030

dcr MASSACHUSETTS DEPARTMENT OF CONSERVATION AND RECREATION

Bridge B-13-014 Canal Street

dcr MASSACHUSETTS DEPARTMENT OF CONSERVATION AND RECREATION

Bridge B-13-017 Kane Court

dcr MASSACHUSETTS DEPARTMENT OF CONSERVATION AND RECREATION

Bridge B-13-015Rte 122/Main Street

dcr MASSACHUSETTS DEPARTMENT OF CONSERVATION AND RECREATION

Church Street Underpass

dcr MASSACHUSETTS DEPARTMENT OF CONSERVATION AND RECREATION

Bridge B-13-029 Factory Pond

dcr MASSACHUSETTS DEPARTMENT OF CONSERVATION AND RECREATION

Bridge B-13-026 Little Factory Pond

dcr MASSACHUSETTS DEPARTMENT OF CONSERVATION AND RECREATION

Bridge B-13-022 Route 122 Overpass

dcr MASSACHUSETTS DEPARTMENT OF CONSERVATION AND RECREATION

Bridge M-24-004 Triad

dcr MASSACHUSETTS DEPARTMENT OF CONSERVATION AND RECREATION

Bridge M-24-004 Triad

Phase 1 Gateways and Parking Areas

- Blackstone Depot, Blackstone
- Old Mendon Street , Blackstone
- Central Street, Millville
- Route 146A (off of Adams Street), Uxbridge

dcr MASSACHUSETTS DEPARTMENT OF CONSERVATION AND RECREATION

The Depot

dcr MASSACHUSETTS DEPARTMENT OF CONSERVATION AND RECREATION

Old Mendon Street

dcr MASSACHUSETTS DEPARTMENT OF CONSERVATION AND RECREATION

Central Street Parking Lot

dcr MASSACHUSETTS DEPARTMENT OF CONSERVATION AND RECREATION

Rte 146A Parking Lot (off of Adams St)

Project Design

- Classified as a Greenway
- 14 ft wide (10 ft paved with 2 ft shoulders)
- Multi – use path, ADA compliant
- Ipe wood bridge decks
- 3 ft clear width from vertical obstructions
- 42 inch wooden railings
- Design will include landscape and interpretive elements

MASSACHUSETTS DEPARTMENT OF CONSERVATION AND RECREATION

Bridge Design

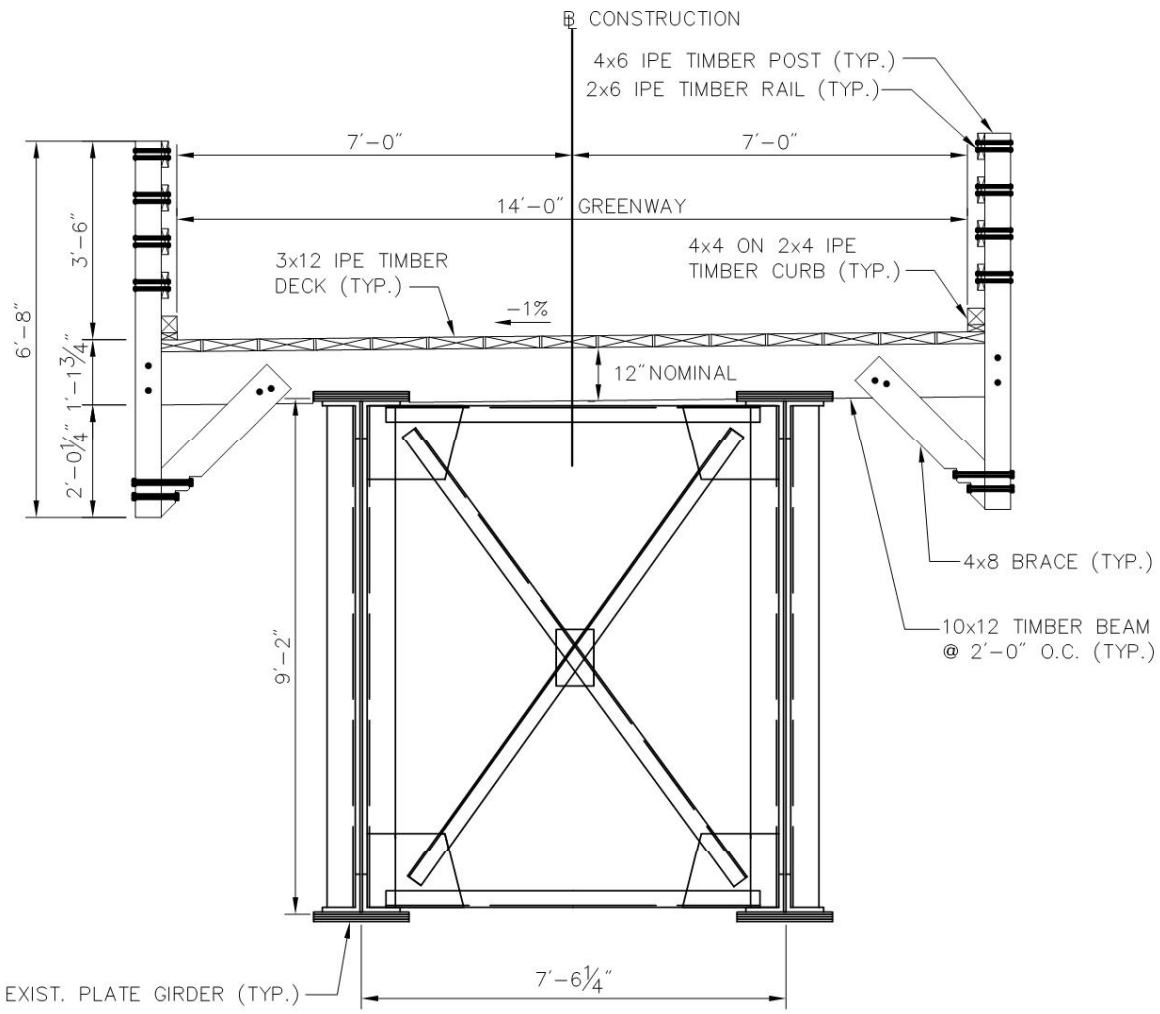

Bridge Deck Samples

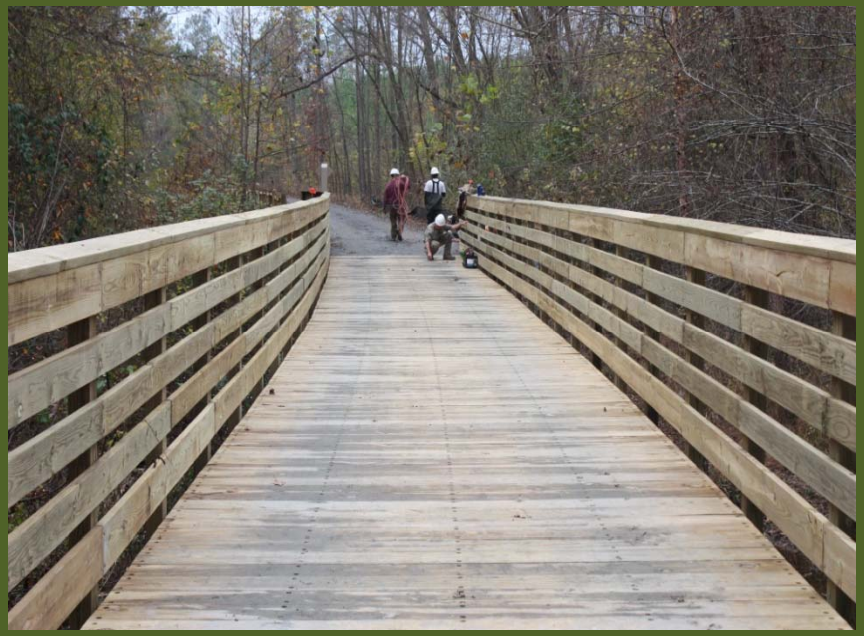

MASSACHUSETTS DEPARTMENT OF CONSERVATION AND RECREATION

Greenway Design

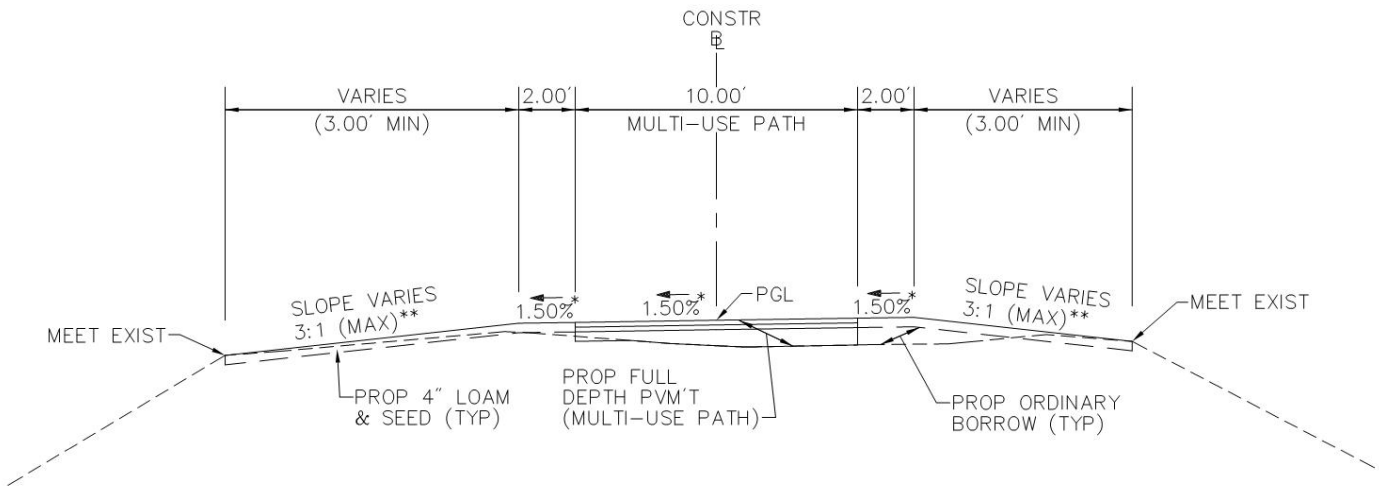

Greenway Examples

Design process

- Environmental permitting
- Historic review
- Community outreach
- Construction costs
- Road closures and construction detours
- Temporary access
- Permanent drainage easements

Easement Coordination

- Meetings with Abutters on 11/12/11
  - BV Boys and Girls Club (P)
  - 112 Canal Street (T)
  - 187 Main Street (T)
  - 195-197 Main Street (T)
  - 103 Canal Street (T)
  - 244 Main Street (T)
  - Land locked property along Main Street (T)
    - » (P) = Permanent Easement
    - » (T) = Temporary Easement

Construction schedule

Advertise in 2011

Bridge preservation and maintenance program

- Factory Pond (2 locations)
- Kane Court
- Canal Street
- Blackstone 'in town' bridge
- St. Paul Street Bridge

Construction Schedule

Advertise in 2012

- Main Street Bridge and Church Street underpass, Blackstone
- Triad Bridge, Millville
- Greenway Phase 1 (Blackstone, Millville and Uxbridge)
  - From St Paul Street to Rte 146A

All Ph 1 construction to be completed by 2014

p1

dcr MASSACHUSETTS DEPARTMENT OF CONSERVATION AND RECREATION

Project Costs

Priority	Bridge #	Description	Eng. Cost/Adm	Preserv. Cost	Painting Cost	Bridge Reconstruction Cost	Design and construction cost
	B-13-030	BSRT/Blackstone River	$73,100.00	$1,253,042.00	$862,500.00	$2,115,542.00	$2,188,642.00
	B-13-029	BSRT Factory Cove	$65,050.00	$1,195,015.00	$1,115,625.00	$2,310,640.00	$2,375,690.00
	B-13-026	BSRT/L Factory Cove	$36,135.00	$996,927.00	$543,750.00	$1,540,677.00	$1,576,812.00
	B-13-017	BSRT/Kane Court	$10,500.00	$319,629.00		$319,629.00	$330,129.00
	B-13-014	BSRT/Canal Street	$22,800.00	$828,041.00	$536,831.00	$1,364,872.00	$1,387,672.00
	B-13-007	BSRT/St. Paul Street	$22,600.00	$325,941.00	$ 187,500.00	$513,441.00	$536,041.00
		TOTAL COSTS	**$230,185.00**	**$4,918,595.00**	**$3,246,206.00**	**$8,164,801.00**	**$8,394,986.00**
	M-24-004	Triad Blackstone	$137,214.00			$2,639,375.00	$2,776,589.00
	B-13-015	BSRT/Main Street	$107,600.00			$992,000.00	$1,099,600.00
	B-13-016	Church Street	$183,750.00			$820,000.00	$1,003,750.00
		TOTAL COSTS	**$428,564.00**	**$0.00**	**$0.00**	**$4,451,375.00**	**$4,879,939.00**
	B-13-031	BSRT/Single Arch					
	B-13-027	BSRT/Seven Arch					
	B-13-008	Canal Street					
		TOTAL COSTS	**$0.00**			**$0.00**	**$0.00**
		Total Project Construction costs					
			Greenway	2,800,000			
			Bridges	12,616,176			

Slide 41

p1 remove B-31 - 8 costs in the columns below
pdomigan, 9/27/2011

Funding sources

- Committed Design and Construction Funds
  - Up to $15 million for bridges through Accelerated Bridge Program
  - $4,850,000 (via ISA from MassDOT to DCR) committed to Segment 1 and 2 design and Segment 1 greenway construction
  - Costs and Funding for Segment 1 ph 2 to be determined

Additional Information

- If you have comments or suggestions:
  - Email: dcr.updates@state.ma.us
  - Write: Department of Conservation and Recreation
    251 Causeway Street, Suite 600, Boston, MA 02114

- *Note: Public comments submitted to DCR by email or letter will be posted on the DCR website in their entirety, and no content, including personal information, will be redacted.*

Questions?