INSERT STUDENT I.D. NUMBER (PEN)

STICKER IN THIS SPACE

APRIL 1998

PROVINCIAL EXAMINATION

MINISTRY OF EDUCATION, SKILLS AND TRAINING

CHEMISTRY 12

GENERAL INSTRUCTIONS

1. Insert the stickers with your Student I.D. Number (PEN) in the allotted spaces above and on the **back** cover of this booklet. **Under no circumstance is your name or identification, other than your Student I.D. Number, to appear on this booklet.**

2. Ensure that in addition to this examination booklet, you have a **Data Booklet** and an **Examination Response Form**. Follow the directions on the front of the Response Form.

3. **Disqualification** from the examination will result if you bring books, paper, notes or unauthorized electronic devices into the examination room.

4. All multiple-choice answers must be entered on the Response Form using an **HB pencil**. Multiple-choice answers entered in this examination booklet will **not** be marked.

5. For each of the written-response questions, write your answer in the space provided in this booklet.

6. When instructed to open this booklet, **check the numbering of the pages** to ensure that they are numbered in sequence from page one to the last page, which is identified by

   END OF EXAMINATION.

7. At the end of the examination, place your Response Form inside the front cover of this booklet and return the booklet and your Response Form to the supervisor.

CHEMISTRY 12 PROVINCIAL EXAMINATION

		Value	Suggested Time
1. This examination consists of **two** parts:			
PART A:	48 multiple-choice questions	48	70
PART B:	10 written-response questions	32	50
	Total:	**80 marks**	**120 minutes**

2. Aside from an approved calculator, electronic devices, including dictionaries and pagers, are **not** permitted in the examination room.

3. The following tables can be found in the separate **Data Booklet**.
   - Periodic Table of the Elements
   - Atomic Masses of the Elements
   - Names, Formulae, and Charges of Some Common Ions
   - Solubility of Common Compounds in Water
   - Solubility Product Constants at 25°C
   - Relative Strengths of Brönsted-Lowry Acids and Bases
   - Acid-Base Indicators
   - Standard Reduction Potentials of Half-cells

   No other reference materials or tables are allowed.

4. **A calculator is essential for the Chemistry 12 Provincial Examination**. The calculator must be a hand-held device designed primarily for mathematical computations involving logarithmic and trigonometric functions. Computers, calculators with a QWERTY keyboard, and electronic writing pads will not be allowed. Students must not bring any external devices to support calculators such as manuals, printed or electronic cards, printers, memory expansion chips or cards, or external keyboards. Students may have more than one calculator available during the examination. Calculators may not be shared, and communication between calculators is prohibited during the examination. In addition to an approved calculator, students will be allowed to use rulers, compasses, and protractors during the examination.

5. The time allotted for this examination is **two hours**.

PART A: MULTIPLE CHOICE

Value: 48 marks **Suggested Time: 70 minutes**

INSTRUCTIONS:	For each question, select the **best** answer and record your choice on the Response Form provided. Using an HB pencil, completely fill in the circle that has the letter corresponding to your answer.

1. Which of the following units can be used to express the rate of a chemical reaction?

   A. mL/g
   B. mol/L
   C. g/mol
   D. mol/min

2. An increase in temperature increases the rate of a chemical reaction because

   A. the activation energy is lower.
   B. exothermic reactions are always favoured.
   C. a greater fraction of particles have sufficient kinetic energy.
   D. the particles are more likely to have favourable collision geometry.

3. Consider the following reaction:

$$CaCO_{3(s)} \rightarrow CaO_{(s)} + CO_{2(g)}$$

   To increase the rate of decomposition of $CaCO_3$, one could

   A. add CO_2 .
   B. remove CO_2 .
   C. increase the temperature.
   D. decrease the temperature.

4. A catalyst increases the rate of a chemical reaction by

   A. increasing kinetic energy.
   B. decreasing the heat of reaction.
   C. changing the concentration of reactants.
   D. providing an alternate reaction mechanism.

OVER

5. Consider the following:

I	forward and reverse rates are equal
II	macroscopic properties are constant
III	can be achieved from either direction
IV	concentrations of reactants and products are equal

Which of the above are true for all equilibrium systems?

A. I and II only
B. I and IV only
C. I, II and III only
D. II, III and IV only

6. In which reaction is the enthalpy of the reactants greater than the enthalpy of the products?

A. $H_2O_{(s)} \rightarrow H_2O_{(\ell)}$
B. $H_2O_{(s)} \rightarrow H_2O_{(g)}$
C. $H_2O_{(\ell)} \rightarrow H_2O_{(s)}$
D. $H_2O_{(\ell)} \rightarrow H_2O_{(g)}$

7. Consider the enthalpy and entropy changes in the following:

$$C_2H_{2(g)} + H_{2(g)} \xrightarrow{?} C_2H_{4(g)} \qquad \Delta H = -175 \text{ kJ}$$

Which of the following statements is correct?

A. No reaction occurs because both the enthalpy and entropy factors favour the reactants.

B. The reaction goes to completion because both the enthalpy and entropy factors favour the product.
C. The system reaches equilibrium because the enthalpy factor favours the reactants and the entropy factor favours the product.
D. The system reaches equilibrium because the enthalpy factor favours the product and the entropy factor favours the reactants.

8. Consider the following equilibrium:

$$NH_{3(g)} + HCl_{(g)} \rightleftarrows NH_4Cl_{(s)} + \text{energy}$$

Which of the following will result in a decrease in the mass of NH_4Cl ?

A. adding NH_3
B. removing HCl
C. decreasing the volume
D. decreasing the temperature

9. Consider the following equilibrium:

$$MgO_{(s)} + H_2O_{(g)} \rightleftarrows Mg(OH)_{2(s)}$$

The equilibrium constant expression is

A. $K_{eq} = [H_2O]$

B. $K_{eq} = \frac{1}{[H_2O]}$

C. $K_{eq} = \frac{[Mg(OH)_2]}{[MgO]}$

D. $K_{eq} = \frac{[Mg(OH)_2]}{[MgO][H_2O]}$

10. Which of the following reactions most favours the reactants?

A. $CH_{4(g)} \rightleftarrows 2H_{2(g)} + C_{(s)}$ $\quad K_{eq} = 1.2 \times 10^{-9}$

B. $SbCl_{5(g)} \rightleftarrows SbCl_{3(g)} + Cl_{2(g)}$ $\quad K_{eq} = 2.5 \times 10^{-2}$

C. $N_2O_{4(g)} \rightleftarrows 2NO_{2(g)}$ $\quad K_{eq} = 4.5 \times 10^{-1}$

D. $C_{(s)} + CO_{2(g)} \rightleftarrows 2CO_{(g)}$ $\quad K_{eq} = 1.4 \times 10^{1}$

OVER

11. Consider the following equilibrium:

$$H_{2(g)} + I_{2(g)} \rightleftarrows 2HI_{(g)}$$

The pressure on the system is increased by reducing the volume. When comparing the new equilibrium with the original equilibrium,

A. all concentrations remain constant.
B. the concentrations of all species have increased.
C. reactant concentrations have increased while product concentrations have decreased.
D. reactant concentrations have decreased while product concentrations have increased.

12. Consider the following equilibrium:

$$N_2O_{4(g)} \rightleftarrows 2NO_{2(g)}$$

A 1.00 L container is initially filled with 0.200 mol N_2O_4. At equilibrium, 0.160 mol NO_2 are present. What is the equilibrium concentration of N_2O_4?

A. 0.040 mol/L
B. 0.080 mol/L
C. 0.120 mol/L
D. 0.160 mol/L

13. When $Ca(OH)_2$ attains solubility equilibrium, the

A. solution is saturated.
B. pH will be less than 7.
C. Trial K_{sp} is less than the K_{sp}.
D. concentrations of the ions are equal.

14. Which of the following describes the changes in ion concentrations when 1.0 g of solid ZnS is added to a saturated solution of ZnS?

	$[Zn^{2+}]$	$[S^{2-}]$
A.	increases	decreases
B.	decreases	decreases
C.	increases	increases
D.	remains constant	remains constant

15. When equal volumes of $0.2\ \text{M}\ NH_4Cl$ and $0.2\ \text{M}\ CuSO_4$ are combined,

A. a precipitate does not form.
B. a precipitate of $CuCl_2$ forms.
C. a precipitate of $(NH_4)_2SO_4$ forms.
D. a precipitate of both $(NH_4)_2SO_4$ and $CuCl_2$ forms.

16. Which of the following anions could be used to separate Pb^{2+} from Ba^{2+} by precipitation?

A. Cl^-
B. OH^-
C. NO_3^-
D. CO_3^{2-}

17. Consider the following graph for a saturated Ag_2CO_3 solution:

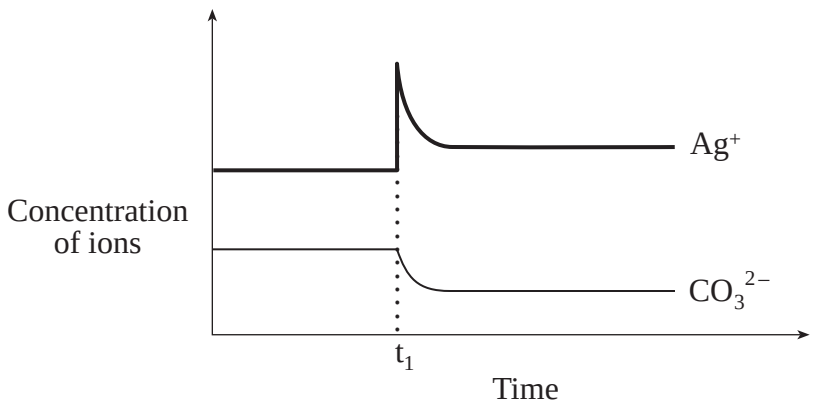

What change occurred at time t_1 ?

A. Water was added.
B. $AgNO_{3(s)}$ was added.
C. $Na_2CO_{3(s)}$ was added.
D. The temperature was increased.

OVER

18. The relationship between the solubility of SrF_2 and its K_{sp} is

A. solubility = $\frac{\sqrt[3]{K_{sp}}}{4}$

B. solubility = $\sqrt[3]{\frac{K_{sp}}{2}}$

C. solubility = $\sqrt[3]{\frac{K_{sp}}{4}}$

D. solubility = $\sqrt{K_{sp}}$

19. Which of the following compounds will form a saturated solution with the greatest concentration of Ag^+ ?

A. AgI
B. AgBr
C. $AgIO_3$
D. $AgBrO_3$

20. The net ionic equation for the reaction between $Sr(OH)_2$ and H_2SO_4 is

A. $H^+ + OH^- \rightarrow H_2O$
B. $Sr^{2+} + SO_4^{2-} \rightarrow SrSO_4$
C. $Sr(OH)_2 + H_2SO_4 \rightarrow SrSO_4 + 2H_2O$
D. $Sr^{2+} + 2OH^- + 2H^+ + SO_4^{2-} \rightarrow SrSO_4 + 2H_2O$

21. Which of the following could act as a Brönsted-Lowry acid, but not as a Brönsted-Lowry base?

A. $NH_{3(aq)}$
B. $H_2O_{(\ell)}$
C. $HClO_{4(aq)}$
D. $HCO_3^-{}_{(aq)}$

22. The strength of an acid depends upon its

A. E°
B. pH
C. concentration.
D. degree of ionization.

23. Which of the following 0.1 M solutions will have the greatest electrical conductivity?

A. HNO_2
B. H_2SO_3
C. H_3PO_4
D. C_6H_5OH

24. Consider the following equilibrium:

$$HX^- + HZ^- \rightleftarrows H_2X + Z^{2-}$$

The reactants are favoured. The strongest acid is

A. Z^{2-}
B. HZ^-
C. HX^-
D. H_2X

25. Consider the following equilibrium:

$$2H_2O_{(\ell)} + \text{energy} \rightleftarrows H_3O^+{}_{(aq)} + OH^-{}_{(aq)}$$

When the temperature is decreased,

A. $\left[H_3O^+\right]$ and K_w both increase.
B. $\left[H_3O^+\right]$ and K_w both decrease.
C. $\left[H_3O^+\right]$ decreases and K_w increases.
D. $\left[H_3O^+\right]$ increases and K_w decreases.

OVER

26. The $\left[OH^-\right]$ in 0.050 M HBr equals

A. 1.0×10^{-14} M
B. 2.0×10^{-13} M
C. 5.0×10^{-2} M
D. 2.0×10^{1} M

27. The relationship between pOH and $\left[OH^-\right]$ is

A. $-\log \text{pOH} = \left[OH^-\right]$
B. $\text{pOH} = -\log\left[OH^-\right]$
C. $\text{antilog pOH} = \left[OH^-\right]$
D. $\text{pOH} = \text{antilog}\left(-\left[OH^-\right]\right)$

28. The pH of a 0.025 M NaOH solution is

A. 0.94
B. 1.60
C. 12.40
D. 13.06

29. Which is the weakest of the following acids?

A. HCN
B. NH_4^+
C. HNO_2
D. HNO_3

30. A solution of 0.10 M HSO_3^- will be

A. basic because $K_a < K_b$
B. acidic because $K_a < K_b$
C. acidic because $K_a > K_b$
D. neutral because $K_a = K_b$

31. Consider the following equilibrium for the indicator phenol red:

$$HInd + H_2O \rightleftarrows Ind^- + H_3O^+$$

In a solution with a pH of 7.3, the indicator phenol red is

A. red because $[HInd] < [Ind^-]$

B. red because $[HInd] = [Ind^-]$

C. yellow because $[HInd] > [Ind^-]$

D. orange because $[HInd] = [Ind^-]$

32. The indicator with $K_a = 4 \times 10^{-8}$ is

A orange IV.
B. neutral red.
C. thymol blue.
D. phenolphthalein.

33. A 25.0 mL sample of H_2SO_4 requires 25.0 mL of 0.100 M KOH for complete neutralization. The initial concentration of the H_2SO_4 is

A. 5.00×10^{-2} M

B. 1.00×10^{-1} M

C. 2.00×10^{-1} M

D. 4.00×10^{-1} M

34. A solution is prepared by adding 10.0 mL of 0.10 M HCl to 25.0 mL of 0.040 M NaOH. The pH of the resulting solution is

A. 1.00
B. 3.00
C. 7.00
D. 12.60

OVER

35. A buffer solution can be prepared by combining, in water, equal moles of

A. HF and KF
B. HIO_3 and HI
C. HBr and LiBr
D. $HClO_4$ and NaOH

36. Which of the following oxides will dissolve in water to form an acidic solution?

A. SO_2
B. TiO
C. K_2O
D. MgO

37. Copper has an oxidation number of $+1$ in

A. CuO
B. CuBr
C. CuC_2O_4
D. $Cu(CH_3COO)_2$

38. When ClO_3^- is oxidized, a possible product is

A. Cl^-
B. ClO^-
C. ClO_2^-
D. ClO_4^-

39. Consider the following redox reaction:

$$Pt + 10H^+ + 6Cl^- + 4NO_3^- \rightarrow H_2PtCl_6 + 2N_2O_4 + 4H_2O$$

The reactant that gains electrons is

A. Pt
B. H^+
C. Cl^-
D. NO_3^-

40. Consider the following redox reaction:

$$Zn + 2OH^- + 2H_2O \rightarrow Zn(OH)_4^{2-} + H_2$$

The oxidation half-reaction is

A. $2H_2O \rightarrow H_2 + 2OH^- + 2e^-$
B. $2H_2O + 2e^- \rightarrow H_2 + 2OH^-$
C. $Zn + 4OH^- \rightarrow Zn(OH)_4^{2-} + 2e^-$
D. $Zn + 4OH^- + 2e^- \rightarrow Zn(OH)_4^{2-}$

41. In an experiment, Pb^{2+} reacts spontaneously with Rh but not with In. The relative strength of the metals as reducing agents is

A. Rh > Pb > In
B. In > Pb > Rh
C. Pb > Rh > In
D. In > Rh > Pb

42. Consider the following redox reaction:

$$2Fe^{2+} + MnO_2 + 4H^+ \rightleftarrows 2Fe^{3+} + Mn^{2+} + 2H_2O$$

The forward reaction has a

A. positive $E°$ value and is spontaneous.
B. negative $E°$ value and is spontaneous.
C. positive $E°$ value and is nonspontaneous.
D. negative $E°$ value and is nonspontaneous.

OVER

43. When H_2O_2 is added to an acidified MnO_4^- solution, a spontaneous reaction occurs in which a product of the oxidation reaction is

A. O_2
B. H_2O
C. Mn^{2+}
D. MnO_2

44. To determine the $\left[Cr_2O_7^{2-}\right]$ in a redox titration, a suitable reagent is

A. Ni^{2+}
B. Sn^{2+}
C. Zn^{2+}
D. Mg^{2+}

45. In an operating fuel cell, the overall reaction is:

$$2H_2 + O_2 \rightarrow 2H_2O \quad \text{(basic)}$$

The substance being reduced is

A. O_2
B. H_2
C. H_2O
D. KOH

Use the following diagram to answer questions 46 and 47.

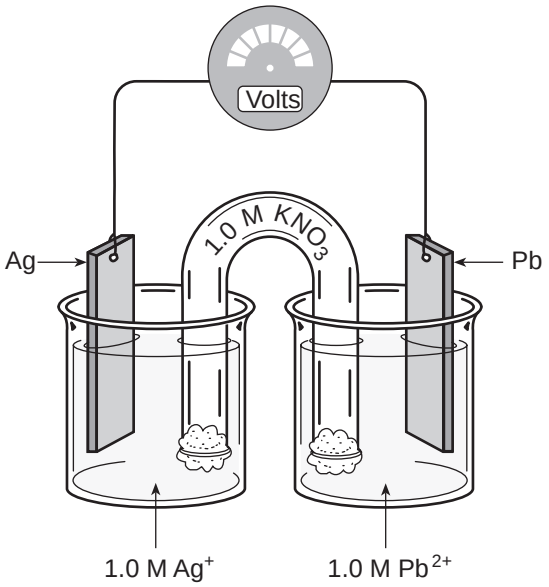

46. As the cell operates, which of the following describes the change in each electrode?

	Mass of silver electrode	Mass of lead electrode
A.	increases	decreases
B.	increases	increases
C.	decreases	decreases
D.	decreases	increases

47. The initial voltage of the electrochemical cell above is

A. −0.93 V
B. −0.67 V
C. +0.67 V
D. +0.93 V

---

48. When molten zinc chloride is electrolyzed, the products are

A. zinc metal and oxygen gas.
B. zinc metal and chlorine gas.
C. hydrogen gas and oxygen gas.
D. hydrogen gas and chlorine gas.

This is the end of the multiple-choice section.
Answer the remaining questions directly in this examination booklet.

OVER

PART B: WRITTEN RESPONSE

Value: 32 marks **Suggested Time: 50 minutes**

INSTRUCTIONS: You will be expected to communicate your knowledge and understanding of chemical principles in a clear and logical manner.

Your steps and assumptions leading to a solution must be written in the spaces below the questions.

Answers must include units where appropriate and be given to the correct number of significant figures.

For questions involving calculation, full marks will NOT be given for providing only an answer.

1. Consider the following potential energy diagram for a reversible reaction:

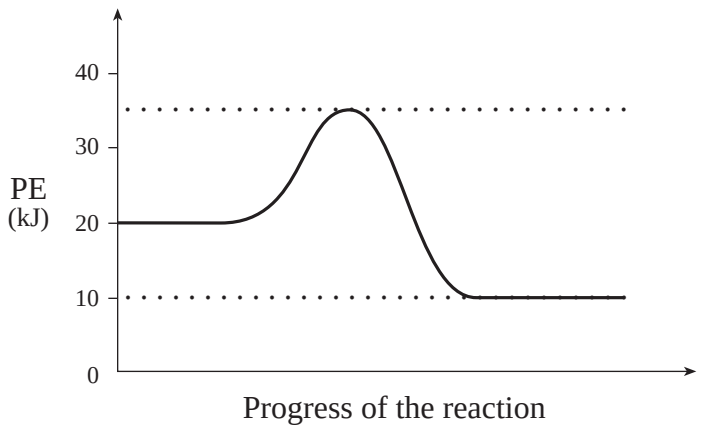

a) Calculate the activation energy for the forward reaction. **(1 mark)**

b) Calculate ΔH for the forward reaction. **(1 mark)**

c) Calculate the activation energy for the reverse reaction. **(1 mark)**

d) On the diagram above, sketch a curve that could result when a catalyst is added. **(1 mark)**

2. State Le Chatelier's Principle. **(2 marks)**

_____

_____

_____

_____

3. Consider the following equilibrium:

$$H_{2(g)} + I_{2(g)} \rightleftarrows 2HI_{(g)} \qquad K_{eq} = 7.1 \times 10^2$$

At equilibrium, the $[H_2] = 0.012$ mol/L and $[HI] = 0.40$ mol/L. What is the equilibrium concentration of I_2 ? **(2 marks)**

OVER

4. Consider the following reaction:

$$Cu_{(s)} + 2AgCH_3COO_{(aq)} \rightarrow Cu(CH_3COO)_{2(aq)} + 2Ag_{(s)}$$

A piece of Cu wire is placed into 1.00 L of a saturated solution of silver acetate, $AgCH_3COO$. When all the Ag^+ has reacted, 2.00 g of Cu has been used.

a) Write the net ionic equation for the reaction between Cu and Ag^+. **(1 mark)**

b) Calculate the K_{sp} of $AgCH_3COO$. **(4 marks)**

5. a) Define the term *weak Brönsted-Lowry base*. **(2 marks)**

_____

_____

_____

b) Give an example of a compound that acts as a weak base. **(1 mark)**

6. Lactic acid, C_2H_5OCOOH, is a weak acid produced by the body. At $25°C$, 0.0100 M C_2H_5OCOOH has a pH of 2.95. Calculate the value of K_a for lactic acid.

(4 marks)

OVER

7. The salt NaCN dissolves in water and forms a slightly basic solution.

a) Write the dissociation equation for NaCN in water. **(1 mark)**

b) Write the net ionic equation for the hydrolysis reaction. **(1 mark)**

c) Write the K_b expression and calculate its value. **(2 marks)**

8. A redox reaction that occurs in an alkaline dry cell is:

$$Zn + 2MnO_2 \rightarrow Mn_2O_3 + ZnO \quad (\text{basic})$$

Write the balanced equation for the reduction half-reaction occurring in basic solution.
(3 marks)

9. a) Identify a metal that can be used to cathodically protect the iron hull of a ship. **(1 mark)**

b) Explain how the metal you chose prevents the iron from rusting. **(1 mark)**

_____

_____

_____

OVER

10. Consider the following cell used for the electrolysis of 1.0 M KI solution containing a few drops of phenolphthalein indicator.

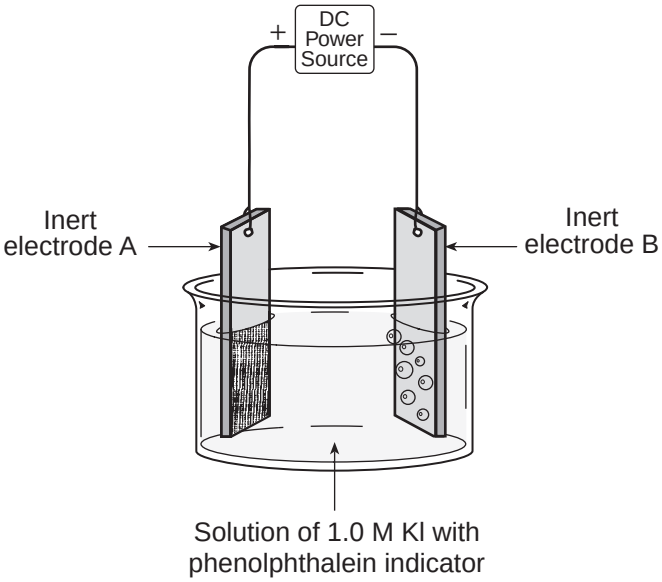

a) Write the equation for the half-reaction taking place at electrode **A**. **(1 mark)**

b) As the cell operates, gas bubbles form and the solution turns pink around electrode **B**. **(2 marks)**

i) Identify the gas that forms.

_____

ii) Explain why the solution turns pink.

_____

_____

END OF EXAMINATION