# Introduction

**This document was originally created by MyDigitalGlobe.com**

CAUTION: This guide is ONLY for the Digital TSOP Lock 4 SOLD by http://www.MyDigitalGlobe.com !!!

The Digital TSOP Lock is to protect your IRD from ECMs sent by Charlie. The bulk of ECMs are TSOP ECMs, with the Digital TSOP Lock you will be protected, although there is one more type of ECM, which is the EEprom ECM.

First, here is a list of tools and supplies you will need:

1. Small Phillips screwdriver
2. Tape measure or ruler
3. Soldering iron w/fine tip
4. Resin-core 60/40 solder
5. Soldering Flux
6. 28 gauge solid wire (wrap wire in different 7 different colours, makes install easier)
7. Wire stripping tool, small long nose pliers, small cutters, X-Acto knife
8. Magnifying glass
9. A little experience in soldering or some guidance
10. and most important of all ! …… patience

# Now you are all set to go !!!

CAUTION: This guide is ONLY for the Digital TSOP Lock 4 !!!

**This document contains the instructions for all the available models !**

***** Important Install Notes *****

**Note on LED's: Green light is always on with lock off or lock on. Green LED just indicates power applied to lock. Red LED depending on receiver maybe remain on or off (This is normal). Locks are shipping without toggle switch attached.**

**IMPORTANT INSTALL NOTES! Board should be mounted on main board so the wires connected to main board are as short as possible. Then you can mount toggle switch on back of unit and run wires to lock.**

# Solder wires to PCB

## For all IRD models

Open up your IRD by removing all the screws. Don't forget the ones on the coaxial connectors. Leave the mainboard screwed into casing, it's not necessary to remove it.

Cut 7 lengths of wrap wire. Make each wire 3.5 inches long. Strip about 1/8" of insulation off both ends of each wire and twirl both tips of each wire. Solder one wires to each one of the 7holes on the front edge of the PCB. It is recommended to insert the wires into the bottom side of the board and solder those from the topside. This is not absolutely required; it just makes for a cleaner looking result. Write down on paper what colour you soldered to what hole, you'll need this later.

Using your magnifying glass, apply a little flux with the soldering iron to the area before you apply the solder, and then apply a little solder to the area first. Give it 5 seconds to cool, then heat it up a little with the soldering iron and insert the cable from beneath.

Once this is done, just add a little more solder if needed as you hold the cable in place so it doesn't fall out of the hole as the solder will be heated. Make sure that the solder from one cable doesn't touch the other not to short them. If this does happen, just dip your soldering iron in the flux and then pull a little line between the both on the board just lightly to separate them. Also, make sure the tips of the cable do not stick out to much, if the do, gently cut off the excess with wire cutters.

After you install your digital lock, ECMs (attacks) your IRD will still give you the error “a serious problem bla bla bla ….”. The difference now is, when this happens you only unplug the electrical power of your IRD for 20 seconds and then re-plug and your watching TV again !

# Soldering cables to IRD’s mainboard

**ONLY for DP301.005, DP301.010 and 3100**

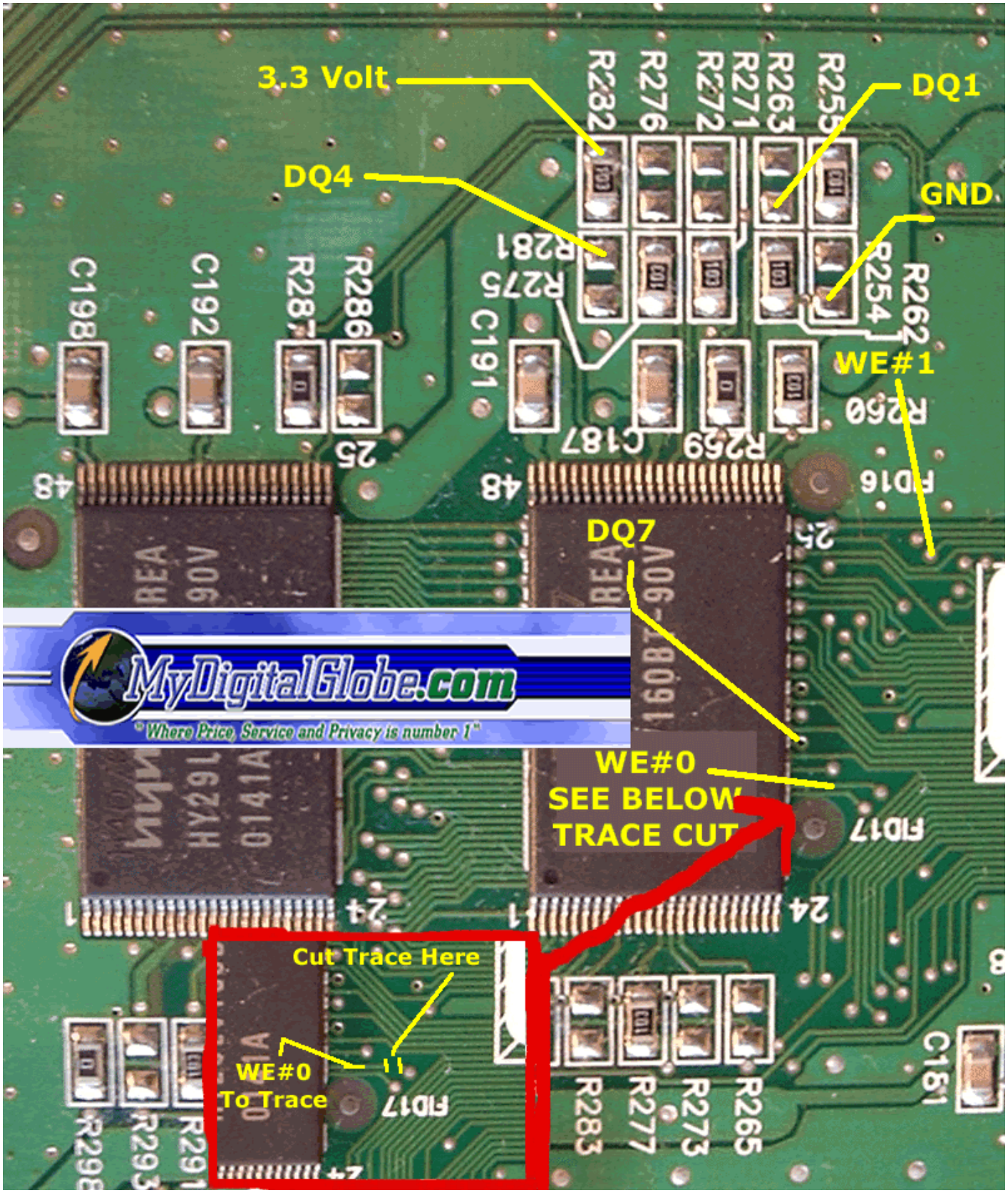
3.3 Volt
DQ1
DQ4
GND
WE#1
DQ7
WE#0
SEE BELOW
TRACE CUT
Cut Trace Here
WE#0
To Trace
MyDigitalGlobe.com
"Where Price, Service and Privacy is number 1"

# Soldering cables to IRD's mainboard

ONLY for DP301.013

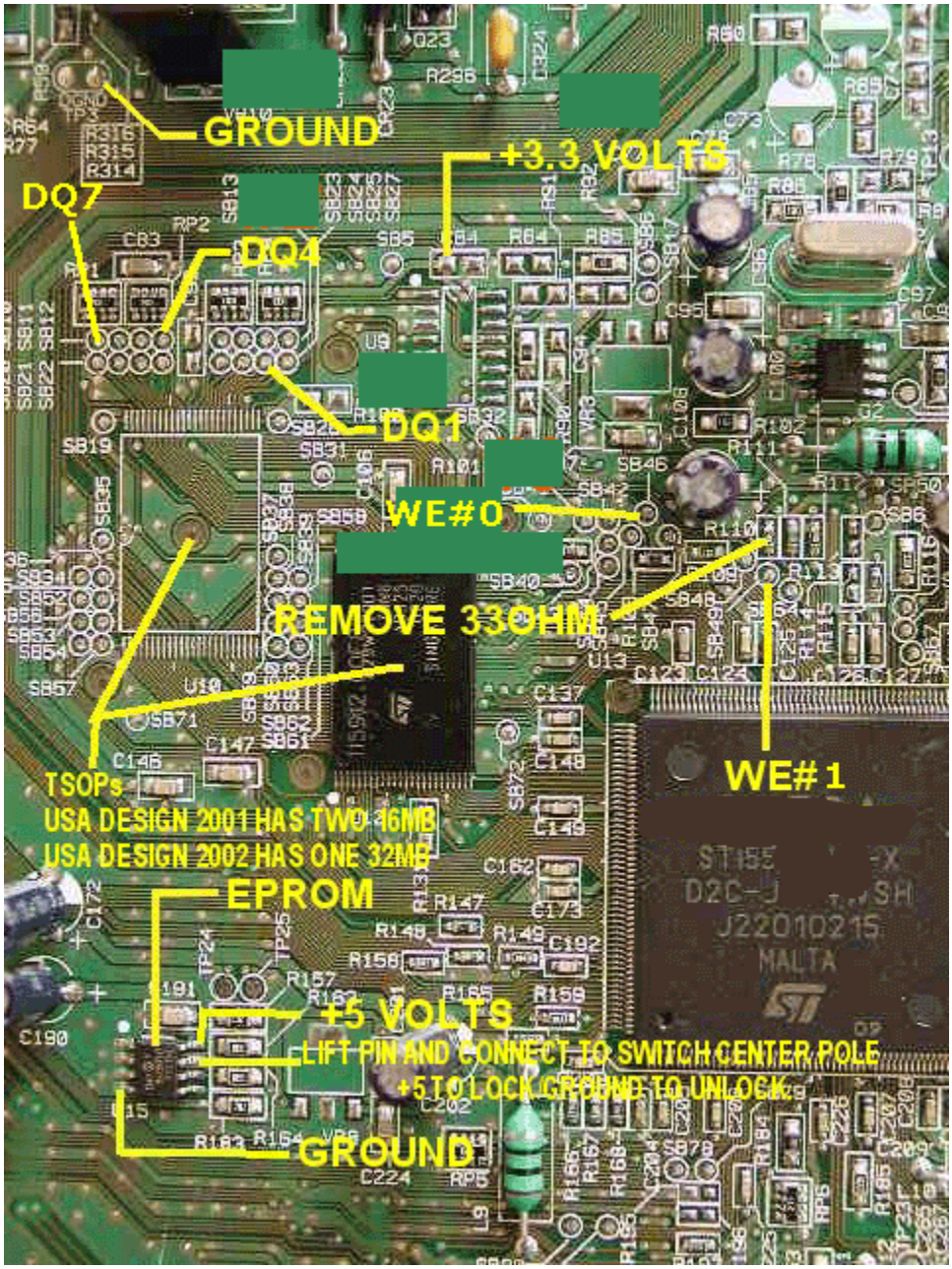

# Soldering cables to IRD's mainboard

**ONLY for 2700, 2800, 3700,3800, 4700 and 4900 with R259 Resistor**

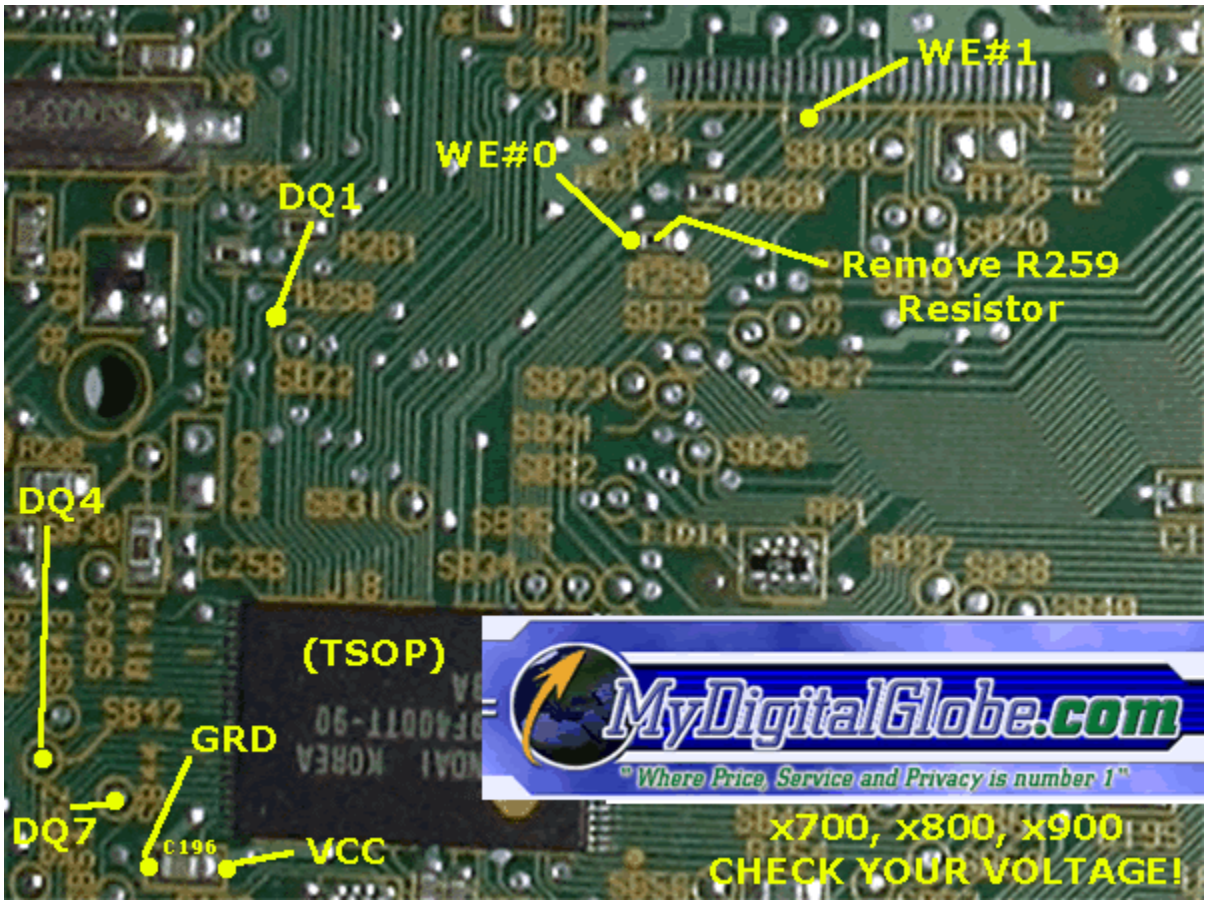


Now, you need to be very careful and take all the time you need.

Focus on R259 as indicated in this picture above. You'll notice 2 little solder pads and a little jumper that bridges the two solder pads together. All you need to do here is very simple. Place the soldering iron on one of the little solder pads. The heat will transfer to the other pad and melt both. So just horizontally push on the little jumper away from the pads. Remove the jumper with your fingers or thin tip pliers off the mainboard. Now with your magnifying glass make sure there is no solder left between the 2 pads. If there is, with the soldering iron just draw a line in between the two pads and this will separate the two.

# Soldering cables to IRD's mainboard

**ONLY for 2700, 2800, 3700,3800, 4700 and 4900 without R259 Resistor**

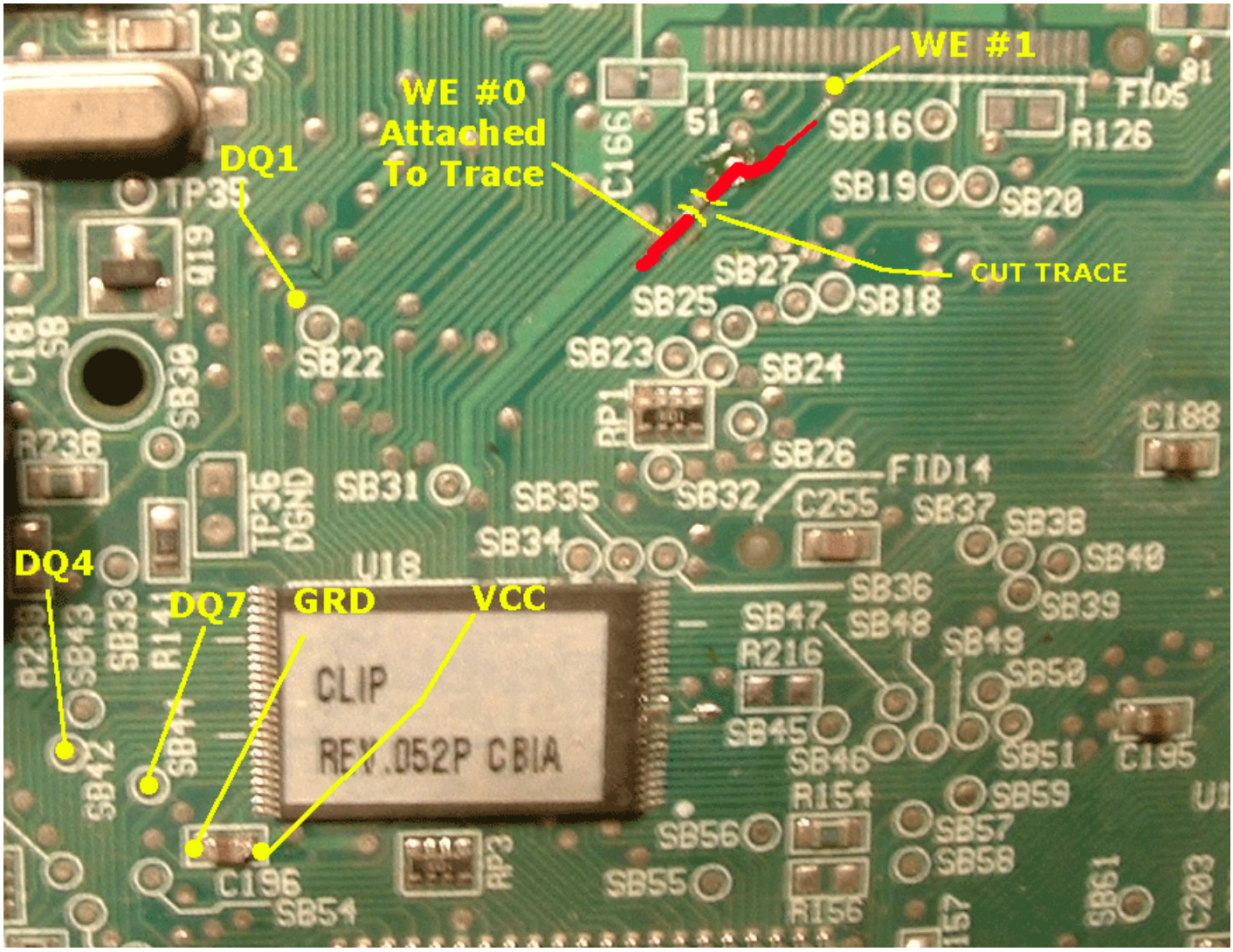


# Soldering cables to IRD's mainboard

**ONLY for 501, 508, 5100, 5800**

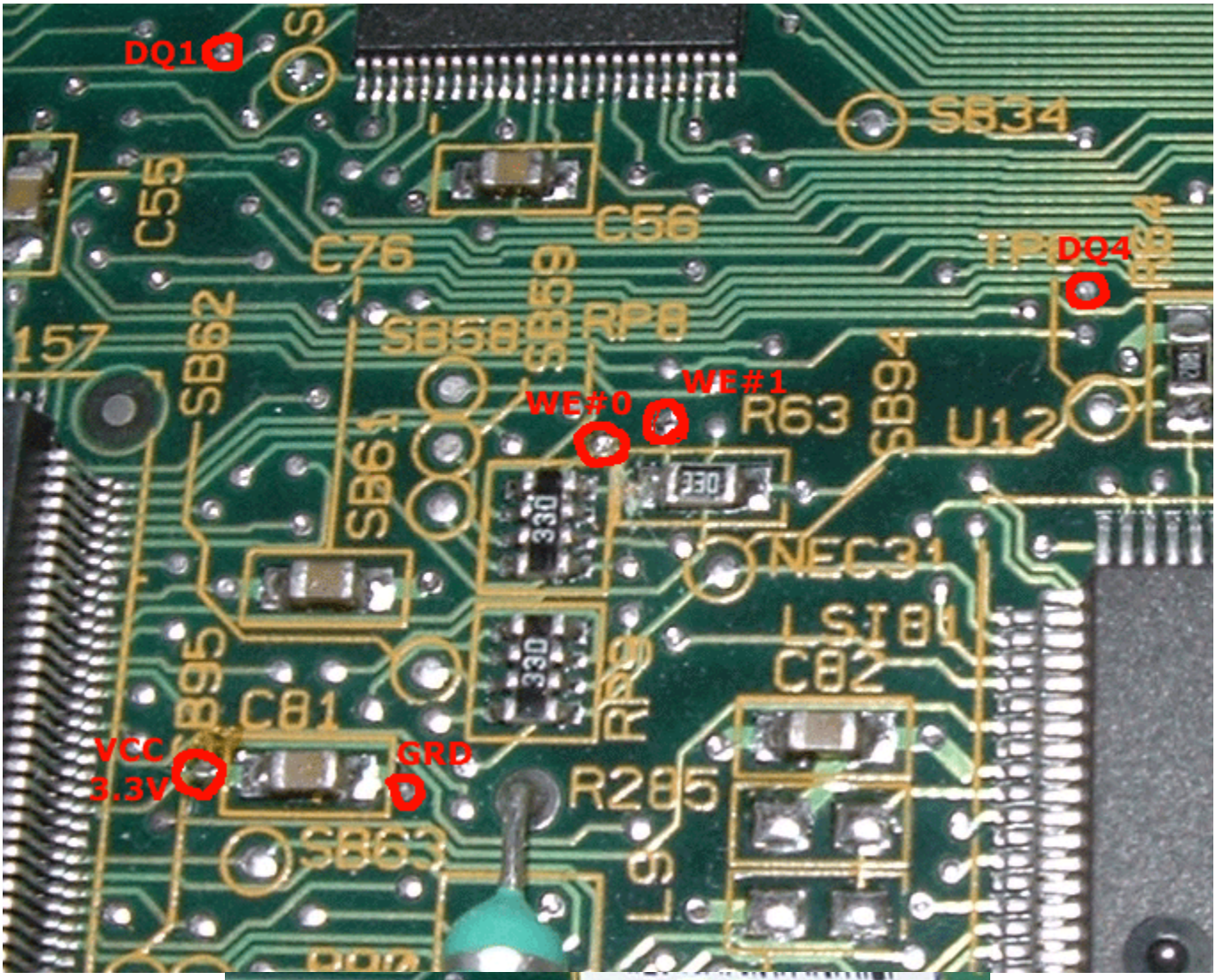
DQ1
SB34
C55
C56
C76
DQ4
SB62
SB58
RP8
WE#1
WE#0
R63
SB94
U12
SB61
NEC31
LSI8
C82
SB95
C81
R28
VCC
3.3V
GRD
R285
SB63

DCKD
DQ7
DL323DT
MBM T
999 AMD
C43
SB26
SB29
R49

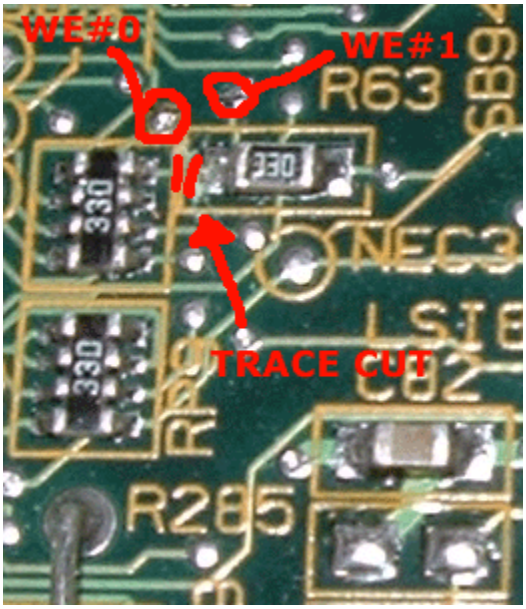
WE#0
WE#1
R63
330
330
330
NEC3
LSI
TRACE CUT
C82
R285

# Soldering cables to IRD's mainboard

**ONLY for 3000, 3500, 4000 and 4500**

**TSOP LOCK FOR x000 Receivers**
**also 3500**

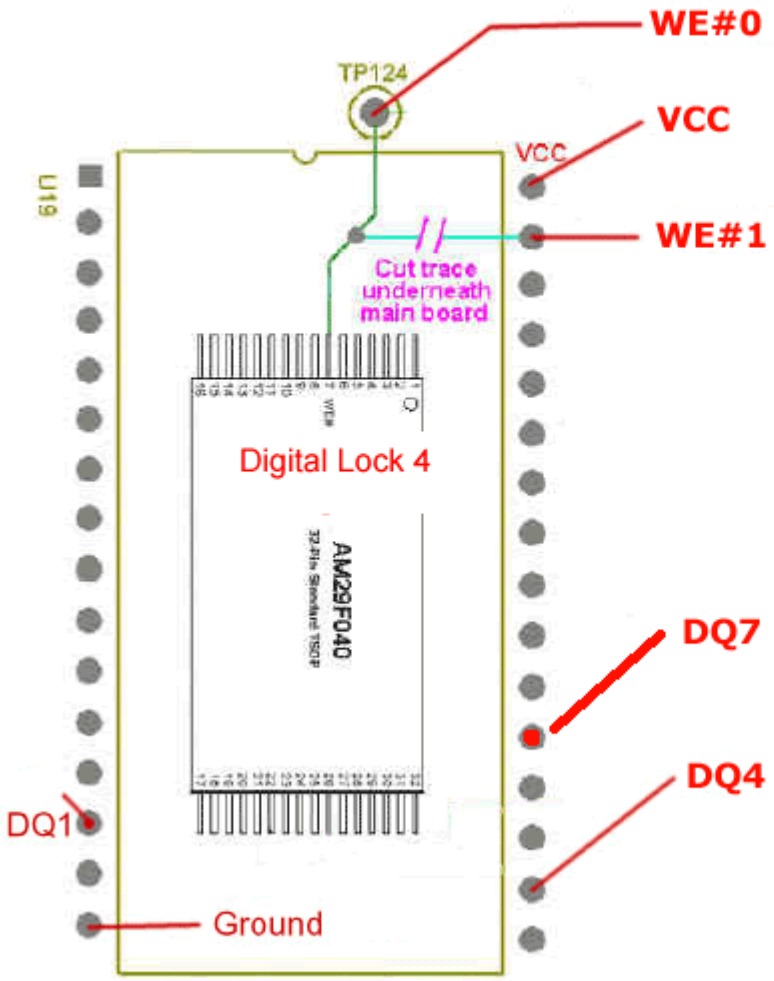

# Soldering cables to IRD's mainboard

**ONLY for 1000**

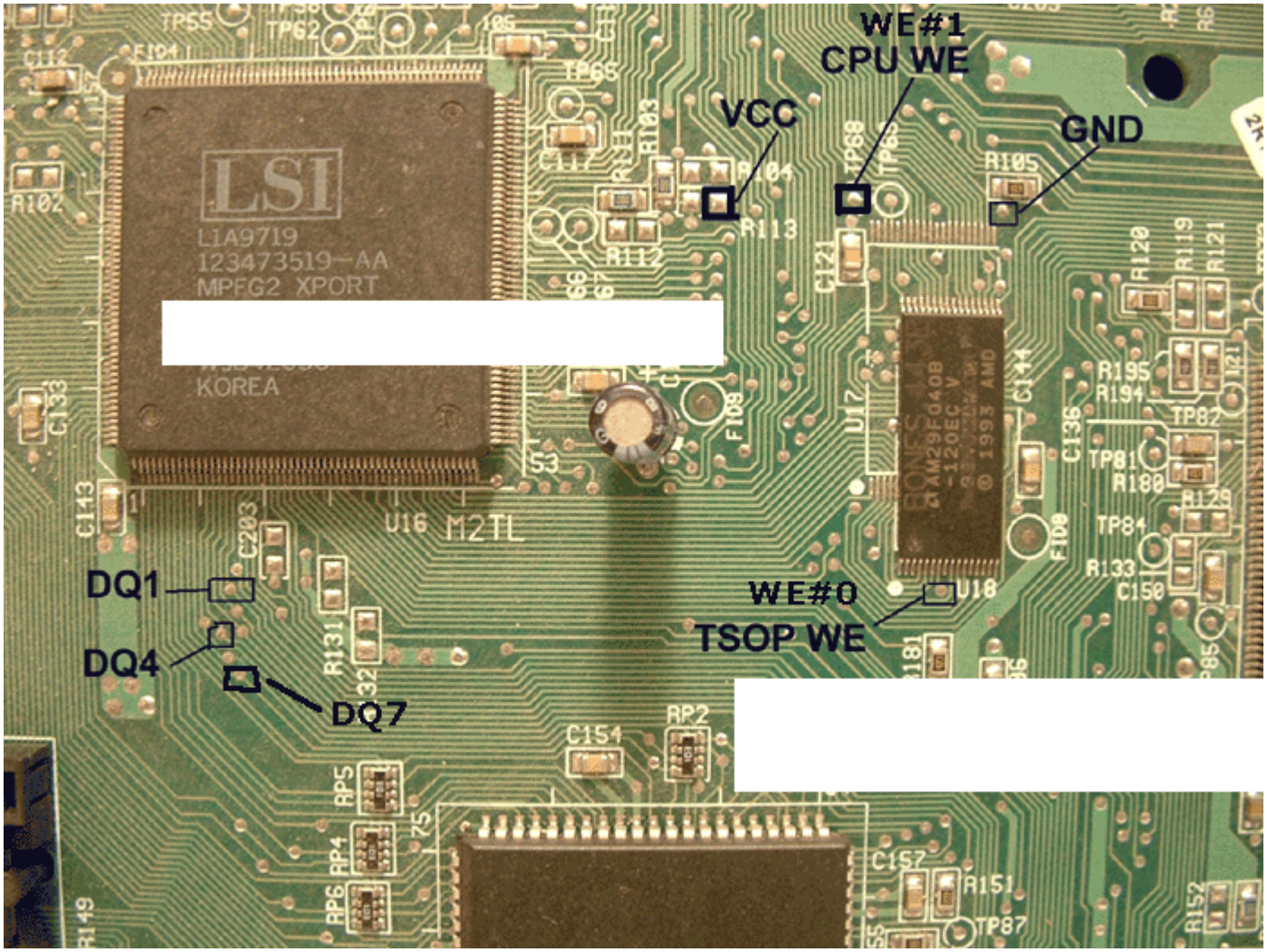

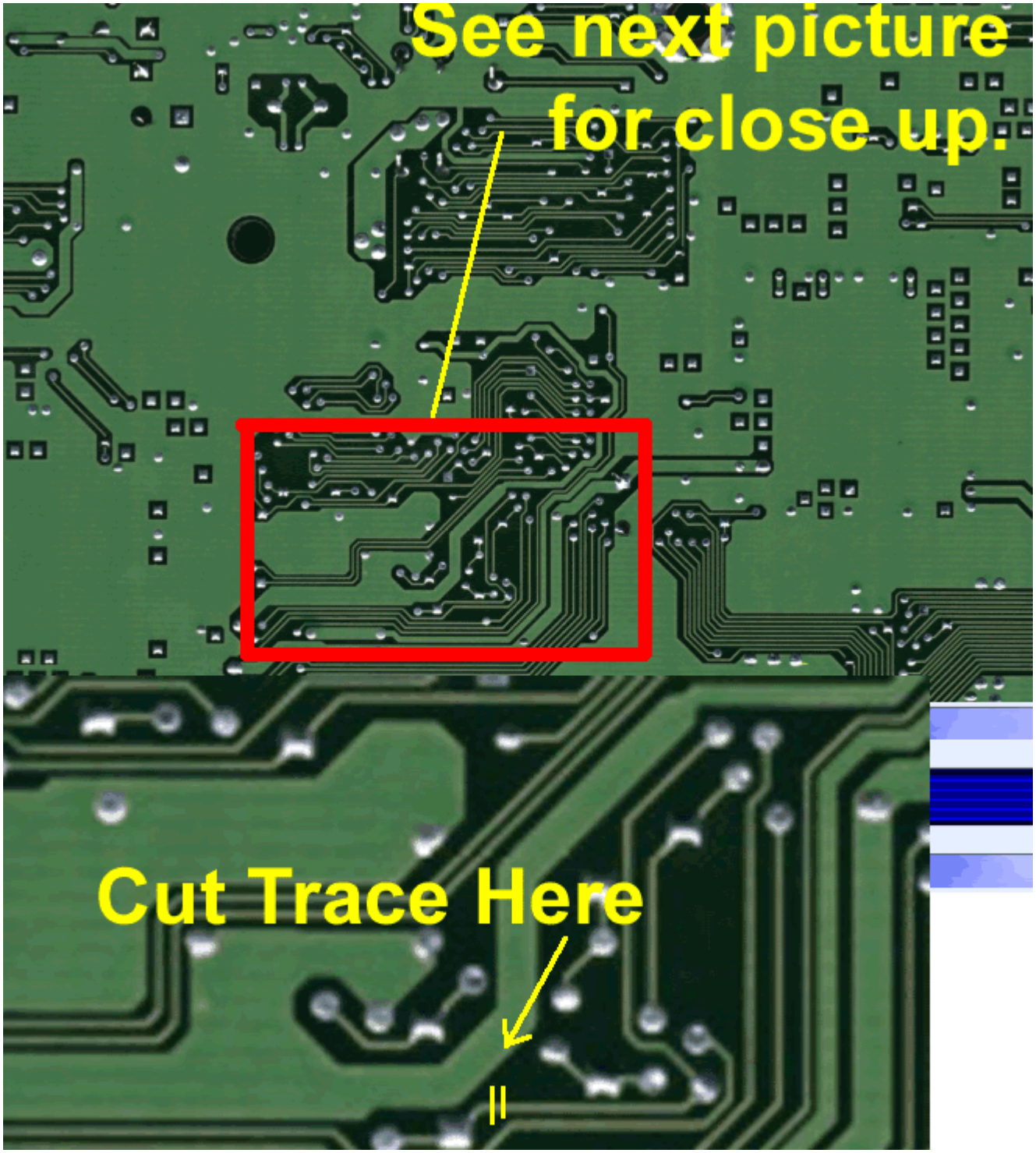
See next picture
for close up.
Cut Trace Here

# EEprom Locking

## For all IRD models

Based on the last several months, it's fair to say that 95% of ECMs are TSOP ECMs. Now that leaves us with only 5% of ECMs that are directed toward the EEprom.

Fixing your EEprom is faster than fixing the TSOP, although, why go through the hassle when it happens, when you can spend $ 5.00 USD to lock your EEprom also.

Go to your local electronics store (i.e. Radio Shack) and buy yourself an SPDT switch (just like one in image bellow) and use your left over cable from the Digital Lock install.

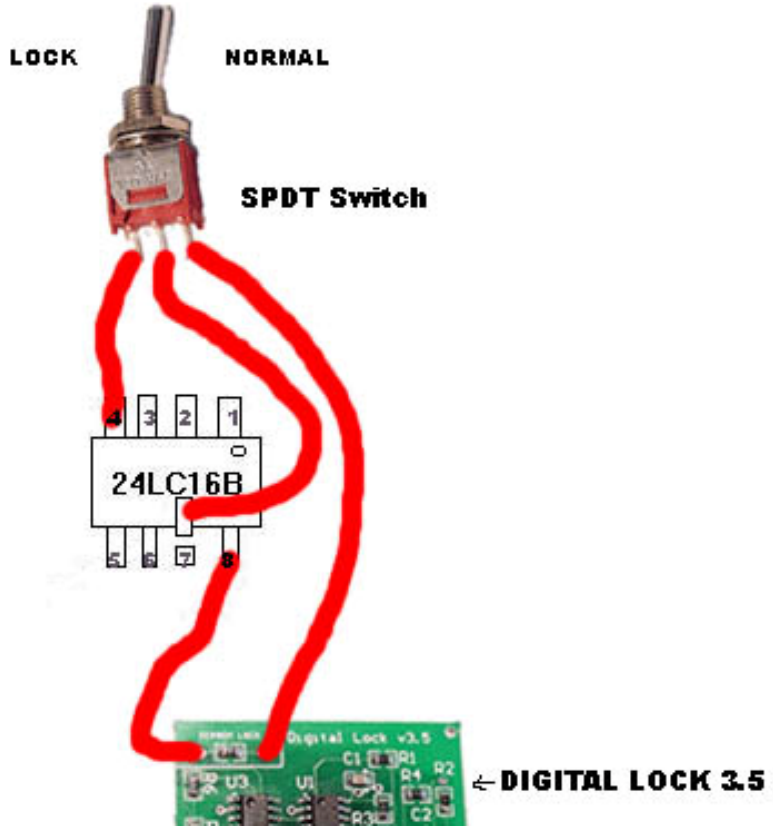


**Use cables just 2 inches longer than the depth of you IRD. This is because the EEprom chip is in the front of the IRD and the switch will be put through the back of your IRD.**

Now I will not give you too much of a step-by-step here since you have gained experience installing your own Digital Lock. Locate your EEprom chip, the chip will have written on it 24LC16B or 24LC08 (see sample picture bellow). You need to lift the pin #7 of the chip off the board. To do this just heat the pin and push up gently with soldering iron tip or use pliers tip. DO NOT break the pin in case you need to re-solder it in the future. Now solder the wire to pin #7, the one you just lifted, NOT pad !

At last, just solder the other cables according to this picture above.

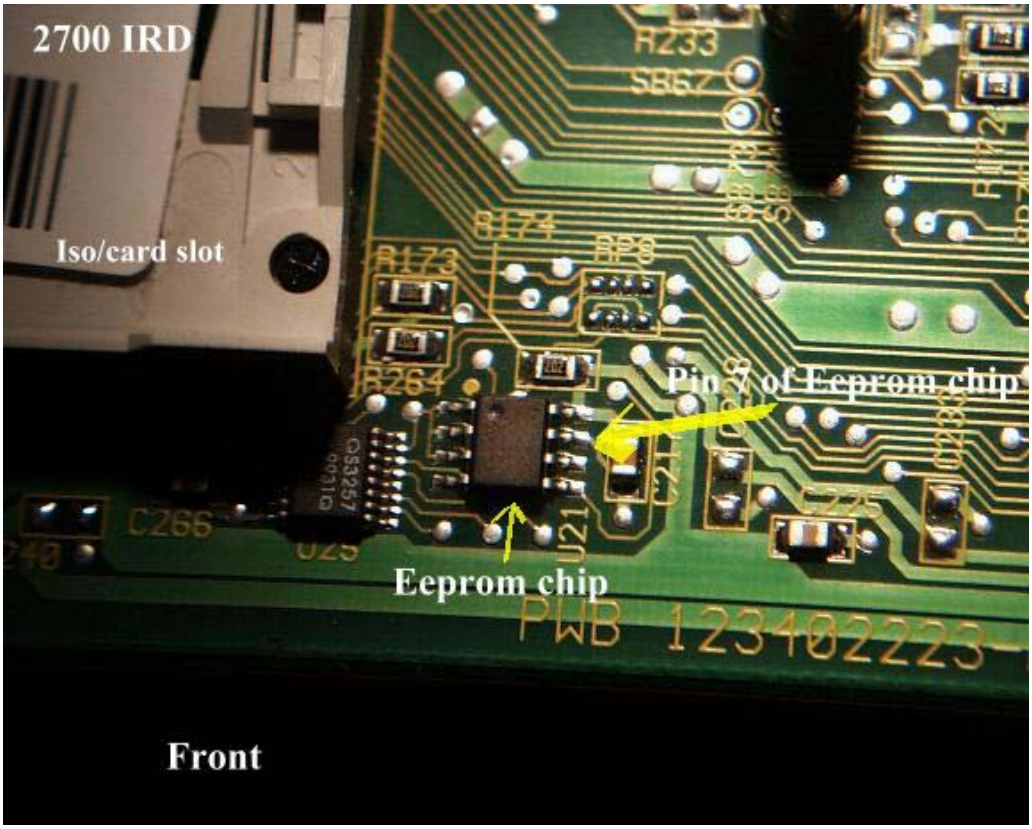

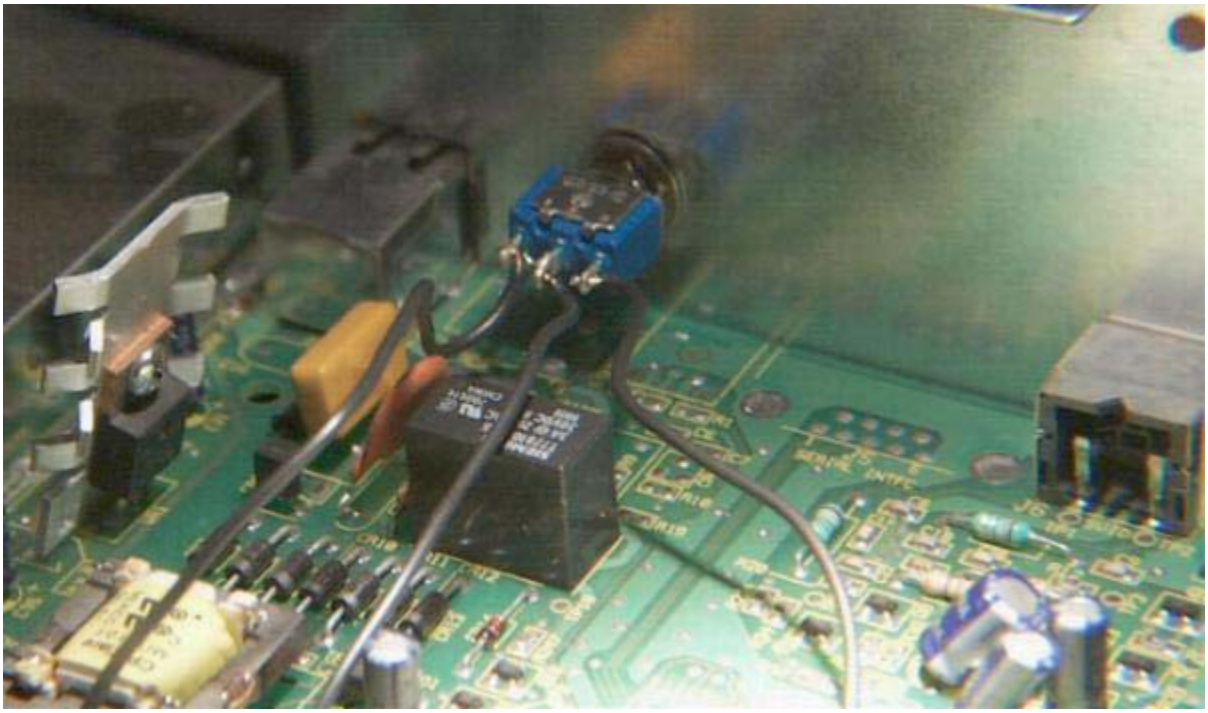
All you have left to do is drill a hole in the back of your IRD of 3/16 of an inch. Take mainboard out of casing to this to avoid metal chippings in IRD that can short circuit your IRD and cause permanent damage. Put the switch through the hole and screw it in there, if your switch has no screw on it, you can glue it by making little stitches with the glue, glue guns are great. Leave the Switch in the LOCK position unless you need to write to your EEprom in JKeys.